SA Series Robot Instruction Manual

Product Series: Full range of SA series
Publication Status: Standard
Revision: A-0001

ADTECH (SHENZHEN) TECHNOLOGY CO., LTD.

© Copyright. All Rights Reserved.

Without prior permission from ADTECH TECHNOLOGY CO., LTD., no information in this document (software etc.) may be extracted, reproduced (in whole or in part) and transmitted (including information and publication) in any forms.

All rights reserved and the violators will be prosecuted. The content is subject to change without prior notice.

All Copyright© reserved by ADTECH TECHNOLOGY CO., LTD.

All rights reserved

The information in this document is subject to change without prior notice. No part of this document may in any form or by any means (electronic, mechanical, micro-coping, photocopying, recording or otherwise) be reproduced, stored in a retrial system or transmitted without prior written permission from ADTECH TECHNOLOGY CO., LTD.

Foreword

Before using the robot, read carefully the instruction manual of the STEP Robot and use the robot on the base of understanding this manual.

Without prior permission from our company, no information in this manual can be copied and transmitted. All the parameters and designs in this manual are subject to further revision without prior notice.

Abstract

This manual provides complete and comprehensive description about the installation, use, parameter setting and maintenance of SA series robot. This manual can be used as the reference document by system integrators when they use our company's SA series robot for the system design of user workstation or as the guidance for system installation, commissioning and maintenance.

In order to ensure proper installation and use of SA series robot, you shall read this manual carefully before using the robot.

Target Readers

System integrator

Onsite technical support staff

Equipment maintenance personnel

After sales service personnel

Contents

This manual is subject to supplementation and change. Check our website for any updates. Our website: www.steprobots.com.

Main Features

a) Small size;

b) Large working space

c) Light weight;

d) Fast operation speed;

e) High repetitive positioning precision;

f) High welding stability.

Descriptions of safety-related marks

The manual includes relevant safety notes for ensuring personal safety and preventing the robot system damage. They are labeled with "Danger", "Caution" or "Important" based on their importance. Before using the robot, the user shall be familiar with the safety notes and strictly follow them.

Danger It may cause hazardous conditions or personal death if it is used improperly.

Caution It may cause danger, minor or serious personal injury and equipment damage if it is used improperly.

Important The part that the user needs to observe and pay attention.

Chapter I Notice for Use

Chapter II Technical Data

Chapter III Handling and Installation

Chapter IV Maintenance

Table of Contents

Chapter I Notice for Use....1
1.1 Scope of Application....1
1.2 Unpacking Inspection....1
Chapter II Technical Data....2
2.1 Robot structure diagram....2
2.2 Mechanical data....3
2.3 Robot load data....3
2.4 Motion data....5
2.5 Working Space....7
Chapter III Handling and Installation....9
3.1 Handling....9
3.2 Installation....11
Chapter IV Maintenance....15
4.1 Lubrication....15
4.2 Timing belt....16

Chapter I Notice for Use

1.1 Scope of Application

The robot is mainly used in arc welding, handling, stacking, packaging, assembly, polishing and other applications where manual operation is replaced totally or partially.

1.2 Unpacking Inspection

Caution

◎ **The robot with damage or missing parts shall not be installed.**
Otherwise there is danger for major accident or personal injury.

Caution

◎ **Read "Safety Instructions for Use of Robot" before using the robot.**
Otherwise there is danger for major accident or personal injury.

During unpacking, check if there is any damage from shipping and the model and specifications on the nameplate are consistent with the order requirements. If any model discrepancy or parts missing is found, contact the manufacturer or supplier immediately.

Chapter II Technical Data

2.1 Robot structure diagram

The SA1400 robot structure is shown in fig.2-1.

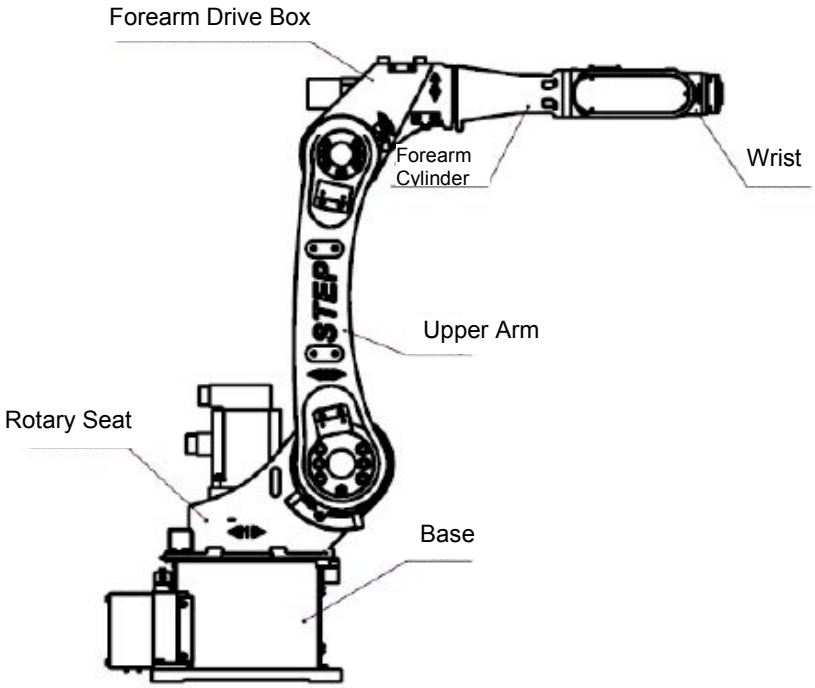

Figure 2-1 SA1400 Robot Structure

SA1800 robot structure is shown in fig. 2-2.

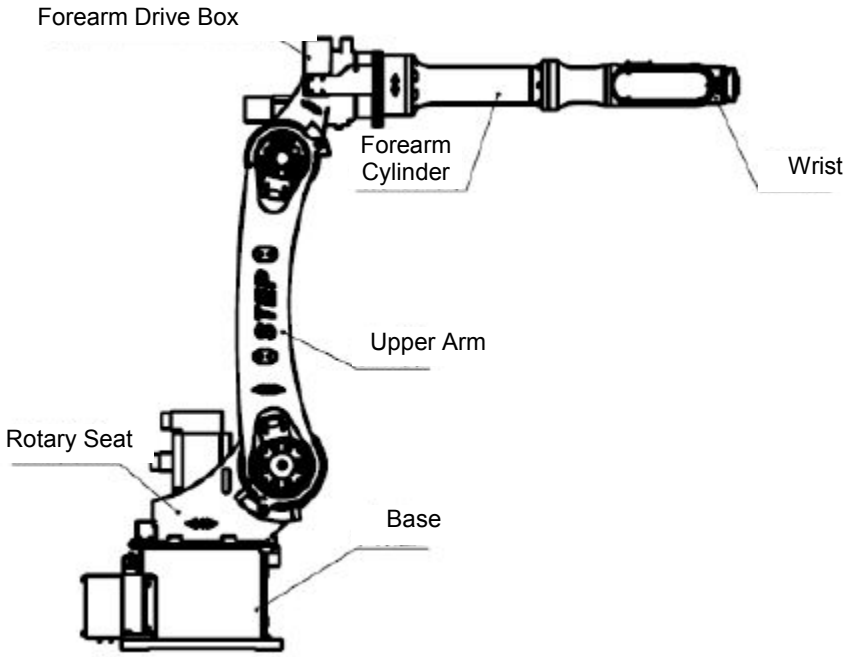

Figure 2-2 SA1800 Robot Structure

2.2 Mechanical data

SA1400 robot's mechanical data is listed in table 2-1.

Table **2-1** SA1400 Mechanical data

Model	SA1400
Max. payload weight (wrist joint) (kg)	6
Max. turning radius (mm)	1405
Total weight (kg)	140

SA1800 robot's mechanical data is listed in table 2-2.

Table **2-2** Mechanical data

Model	SA1800
Max. payload weight (wrist joint) (kg)	8
Max. turning radius (mm)	1818
Total weight (kg)	148

2.3 Robot load data

SA1400 robot's load data is listed in table 2-3.

Table **2-3** SA1400 Robot's Load Data

Robot model	Wrist joint load (kg)	Forearm load (kg)	Upper arm load (kg)	Rotary seat load (kg)
SA1400	6	10	10	20

SA1400 robot's load locations are shown in figure 2-3.

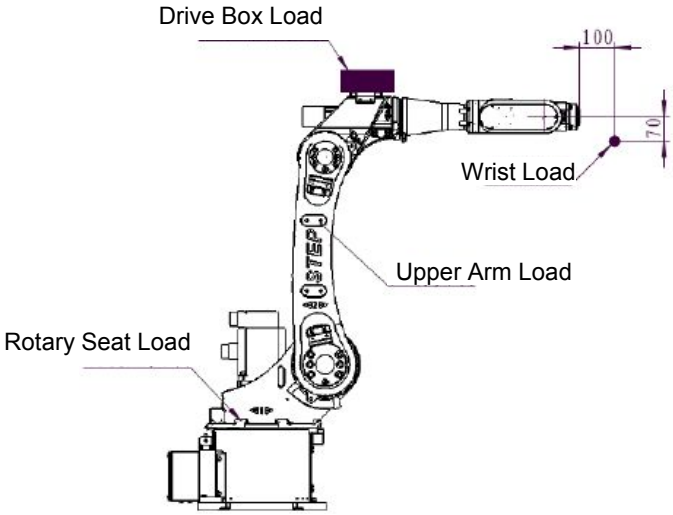

Figure 2-3 SA1400 Robot's Load Location

The relationship between SA1400's wrist load mass and center of gravity is shown in fig.2-4.

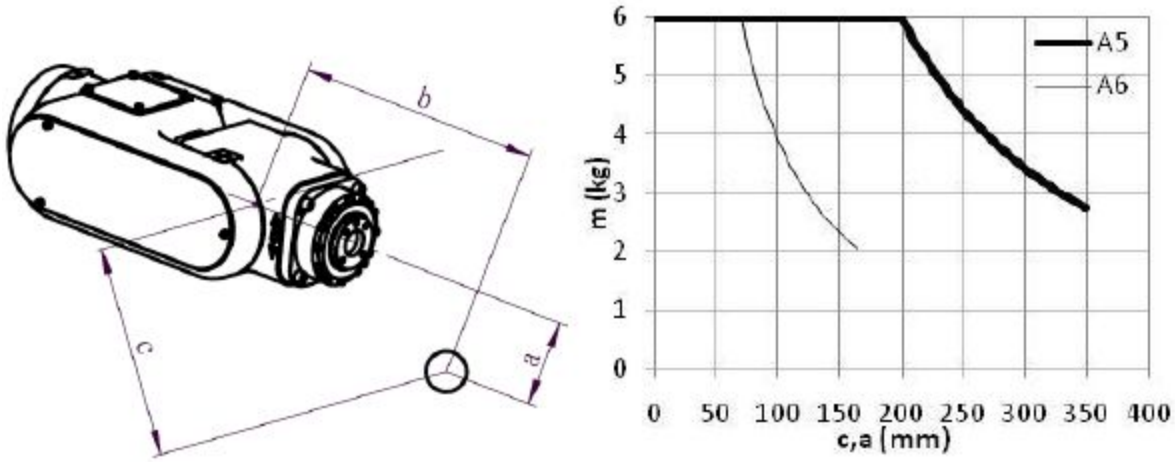

Figure 2-4 Relationship between SA1400's Wrist Load Mass and Center of Gravity

SA1800 robot's load data is listed in table 2-4.

Table **2-4** SA1800 Robot's Load Data

Robot model	Wrist joint load (kg)	Forearm load (kg)	Upper arm load (kg)	Rotary seat load (kg)
SA1800	8	10	10	20

SA1800 robot's load locations are shown in figure 2-5.

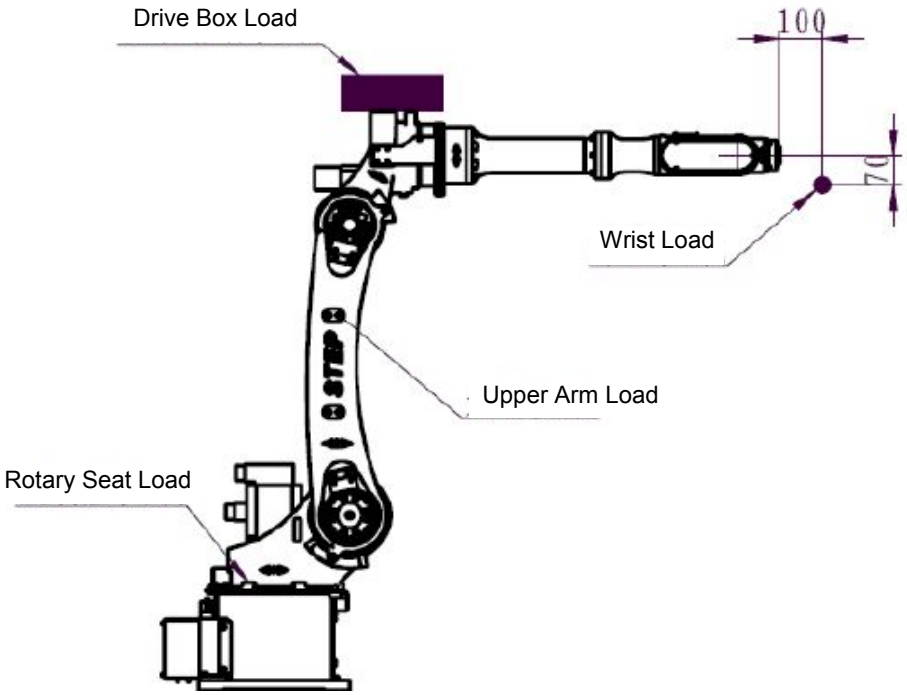

Figure 2-5 SA1800 Robot's Load Location

The relationship between SA1800's wrist load mass and center of gravity is shown in fig.2-6.

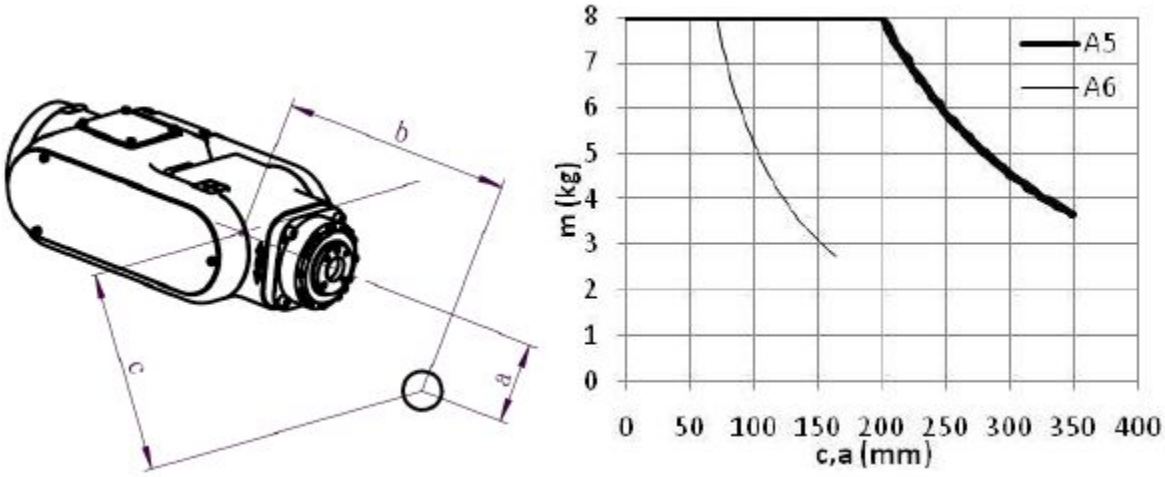

Figure 2-6 Relationship between SA1800's Wrist Load Mass and Center of Gravity

2.4 Motion data

The motion data of each joint of SA1400 robot (wrist load 6kg) is shown in table 2-5.

Table **2-5** Motion Data of Each Joint of SA1400 Robot

Joint	Rotation range (controlled by program)	Joint speed
J1	±150°	150°/S
J2	+65°～-180°	150°/S
J3	+160°～-110°	160°/S
J4	±170°	360°/S
J5	±120°	320°/S
J6	±360°	360°/S

The motion data of each joint of SA1800 robot (wrist load 8 kg) is shown in table 2-6.

Table **2-6** Motion Data of Each Joint of SA1800 Robot

Joint	Rotation range (controlled by program)	Joint speed
J1	±165°	150°/S
J2	+65°～-180°	150°/S
J3	+170°～-100°	160°/S
J4	±185°	360°/S
J5	±120°	320°/S
J6	±360°	360°/S

The motion of each joint of SA1400 robot is shown in fig.2-7.

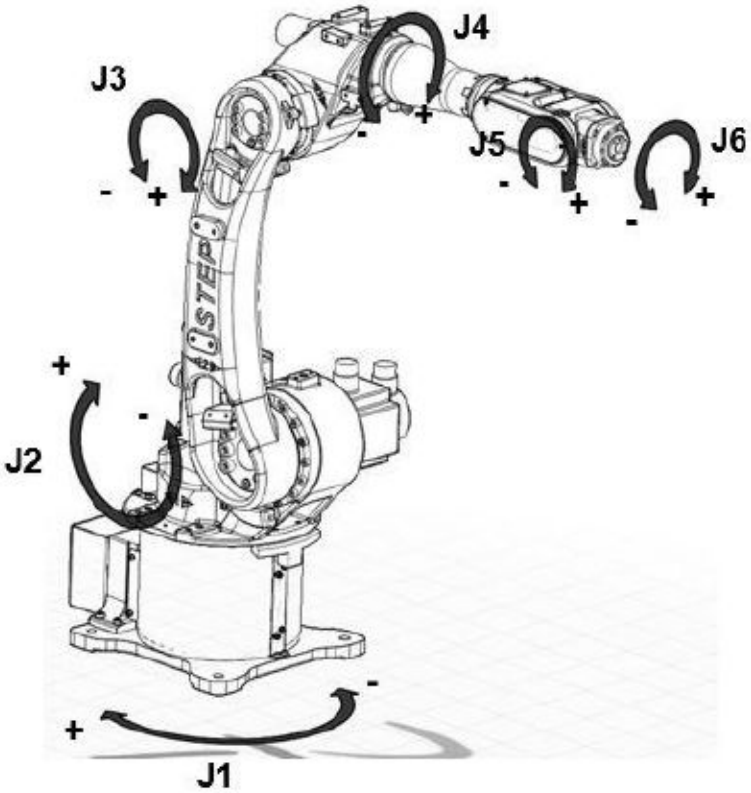

Figure 2-7 Motion of Each Joint of SA1400 Robot

The motion of each joint of SA1800 robot is shown in fig.2-8.

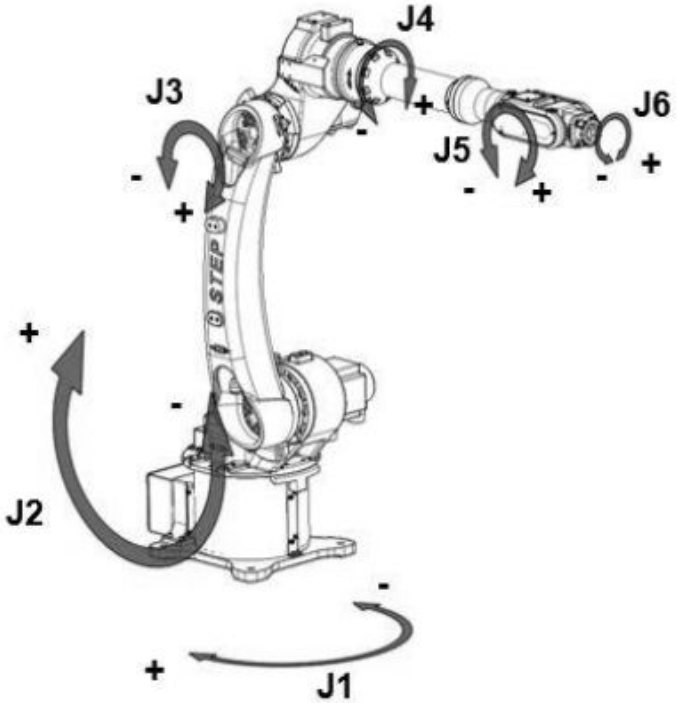

Figure 2-8 Motion of Each Joint of SA1800 Robot

2.5 Working Space

This working space refers to the zero point and working range of mechanical system, which is slightly different with that defined in the mechanical system's instruction manual. The working space defined in mechanical system's instruction manual must be followed when using the robot, or else errors will occur.

The working space of SA1400 robot is shown in fig.2-9. The mechanical CAD drawing can be downloaded from STEP's website: www.steprobots.com .

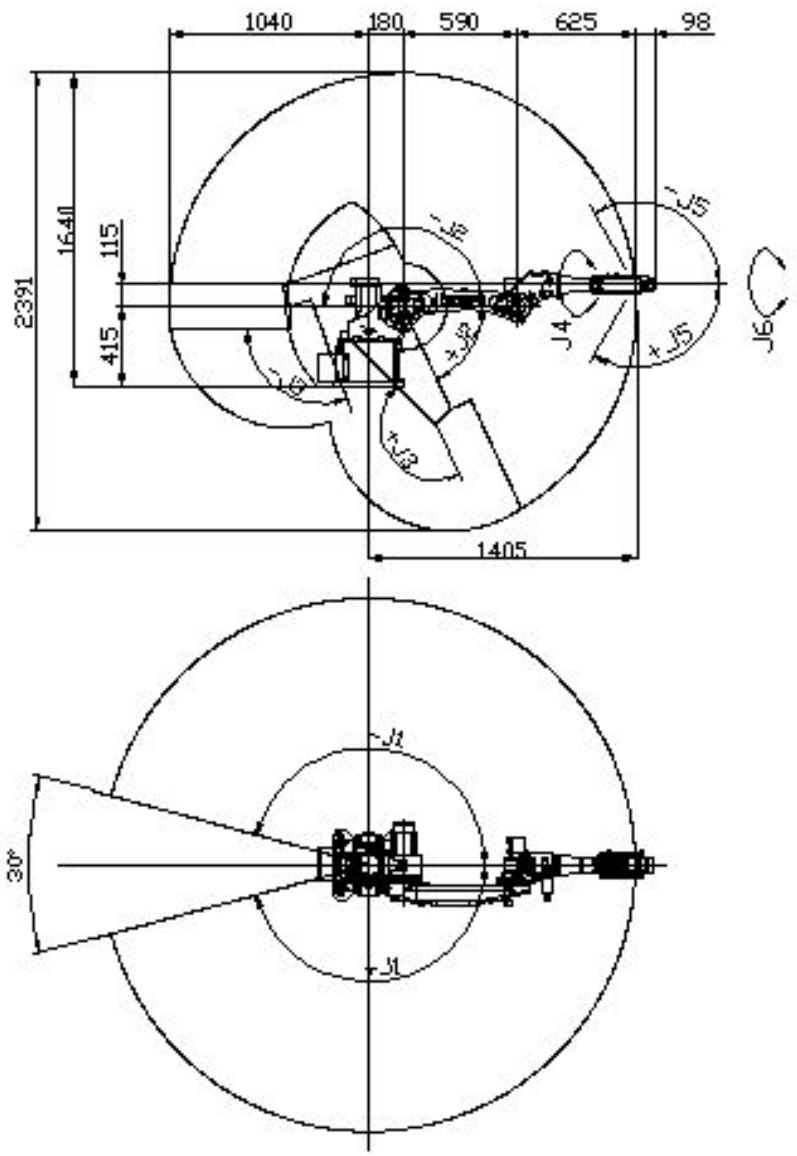

Figure 2-9 SA1400 Working Space

The working space of SA1800 robot is shown in fig.2-10. The mechanical CAD drawing can be downloaded from STEP's website: www.steprobots.com .

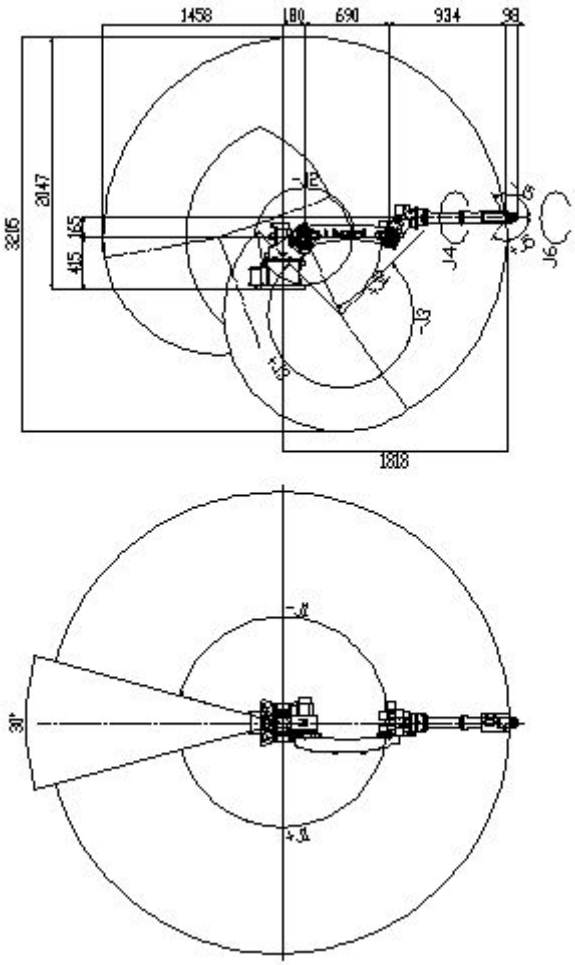

Figure 2-10 SA1800 Working Space

Chapter III Handling and Installation

3.1 Handling

The robot shall be moved using a fork lift. When using a fork lift to move the robot, the base of the robot shall be installed with two fork pocket tooling, which are the accessories of the robot. In each transportation, make sure that the fork pocket tooling is securely installed and the robot is adjusted to transportation posture.

The transportation posture of SA1400 robot is shown in fig.3-1.

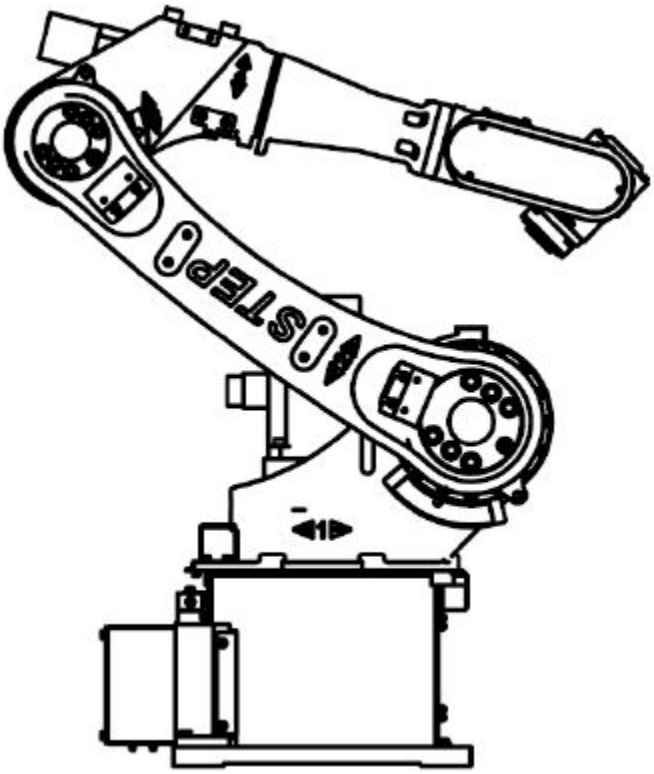

Figure 3-1 SA1400 Robot Transportation Posture

The joint angle in SA1400 robot transportation posture is listed in table 3-1.

Table **3-1** Joint Angle in SA1400 Robot Transportation Posture

Joint	J1	J2	J3	J4	J5	J6
Angle	0	-145	+165	0	+120	0

The transportation posture of SA1800 robot is shown in fig.3-2.

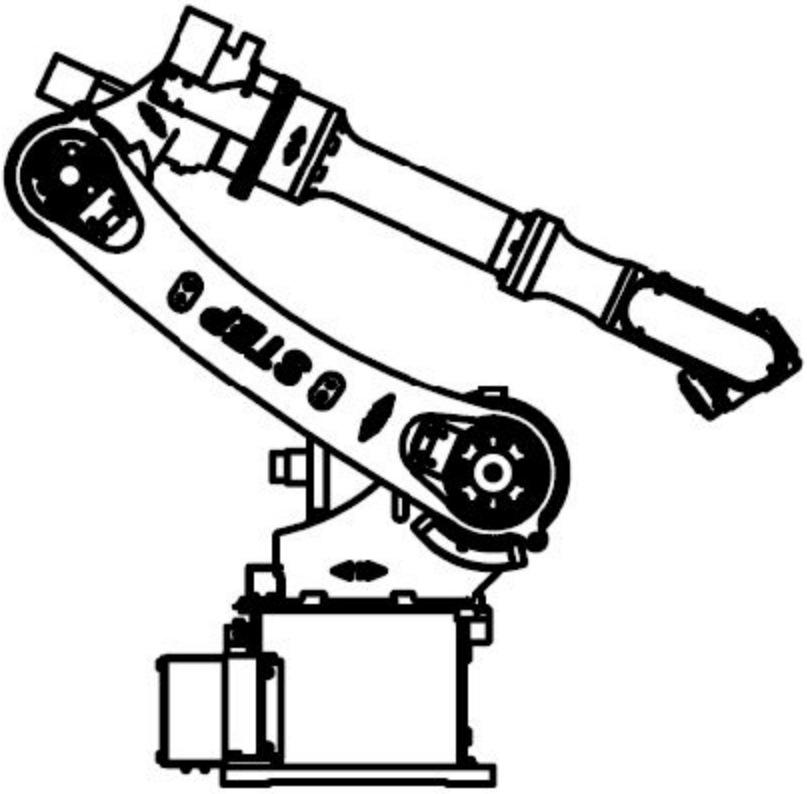

Figure 3-2 SA1800 Robot Transportation Posture

The joint angle in SA1800 robot transportation posture is listed in table 3-2.

Table **3-2** Joint Angle in SA1800 Robot Transportation Posture

Joint	J1	J2	J3	J4	J5	J6
Angle	0	-145	+170	0	+120	0

3.2 Installation

There are 3 installation methods for the robot, such as ground installation, ceiling installation and wall installation.

1. The base mounting hole dimensions of SA1400/SA1800 robot are shown in fig.3-3.

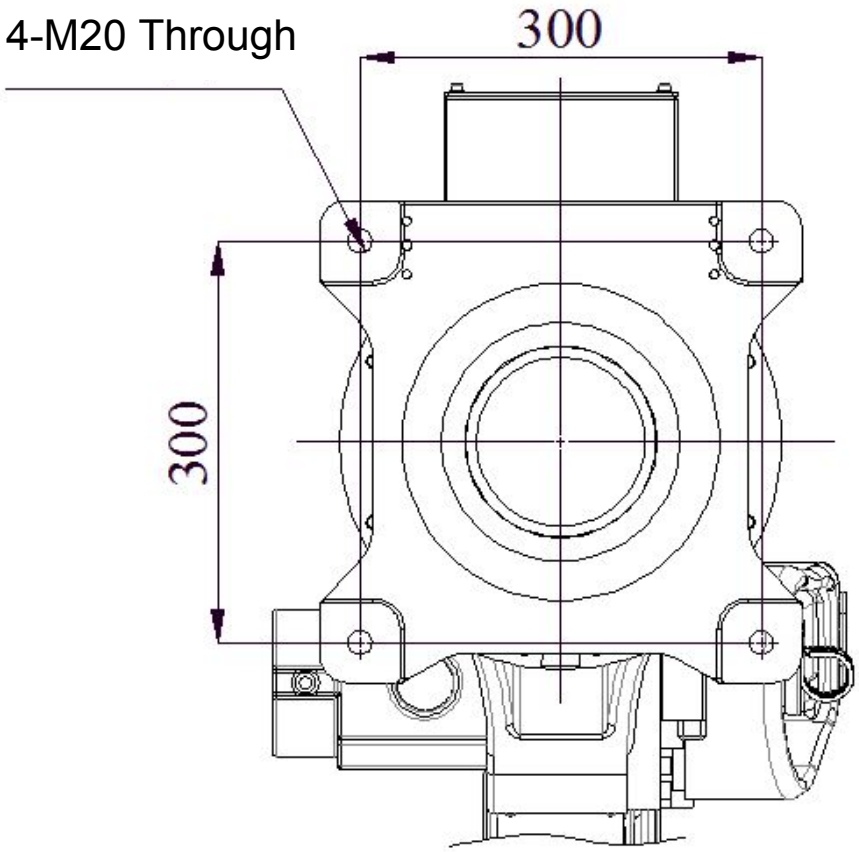

Figure 3-3 Base Mounting Hole Dimensions of SA1400/SA1800

2. The upper arm auxiliary mounting hole dimensions of SA1400 are shown in fig.3-4; The upper arm auxiliary mounting hole dimensions of SA1800 is shown in fig.3-5.

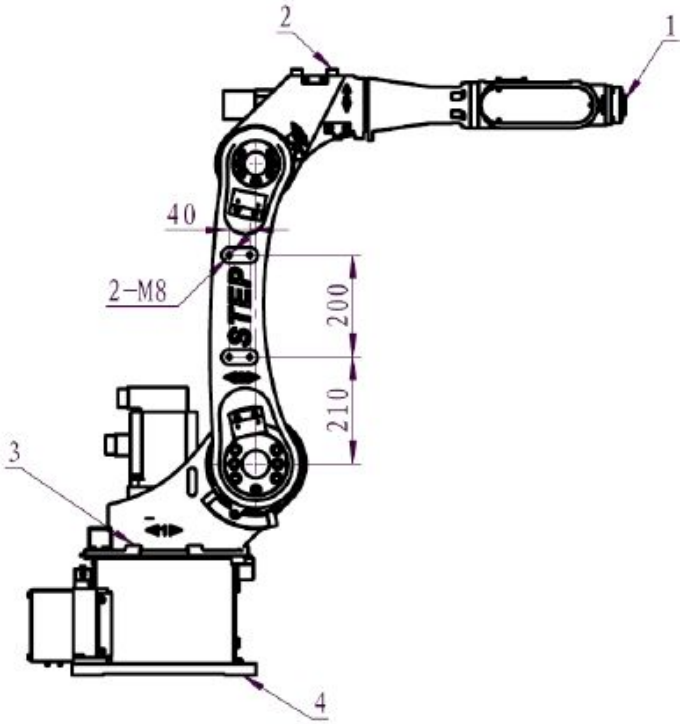

Figure 3-4 Upper Arm Auxiliary Mounting Hole Dimensions of SA1400

(1. Tool flange connection; 2. Forearm drive box connection; 3. Rotary seat connection; 4. Base connection)

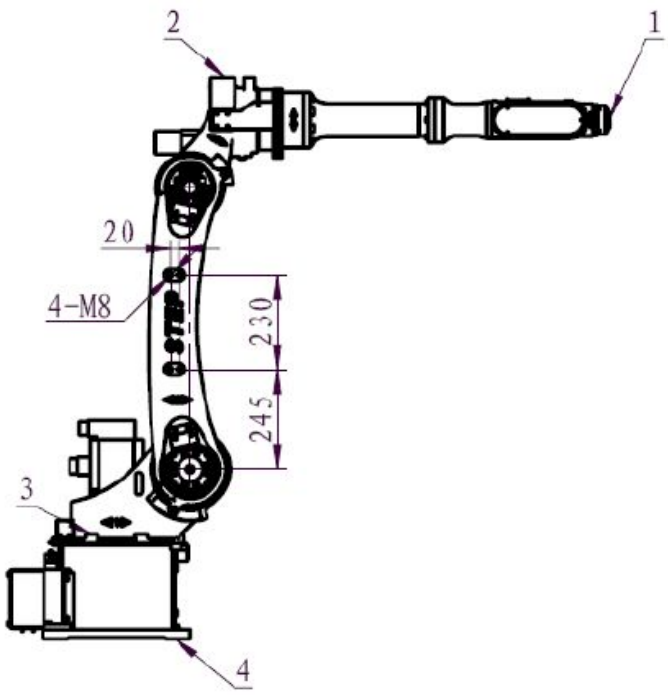

Figure 3-5 Upper Arm Auxiliary Mounting Hole Dimensions of SA1800
(1. Tool flange connection; 2. Forearm drive box connection; 3. Rotary seat connection; 4. Base connection)

3. The dimensions of forearm drive box and rotary seat auxiliary installation hole of SA1400 are shown in fig.3-6; the dimensions of forearm drive box and rotary seat auxiliary installation hole of SA1800 are shown in fig.3-7.

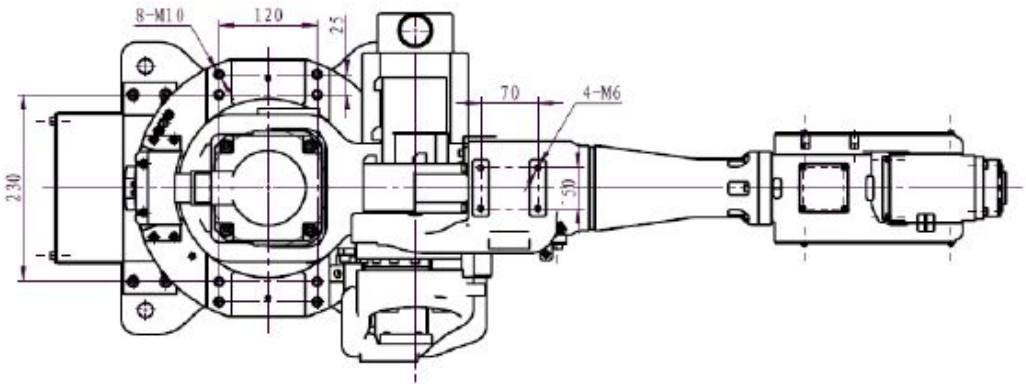

Figure 3-6 Dimensions of Forearm Drive Box and Rotary Seat Auxiliary Installation Hole of SA1400

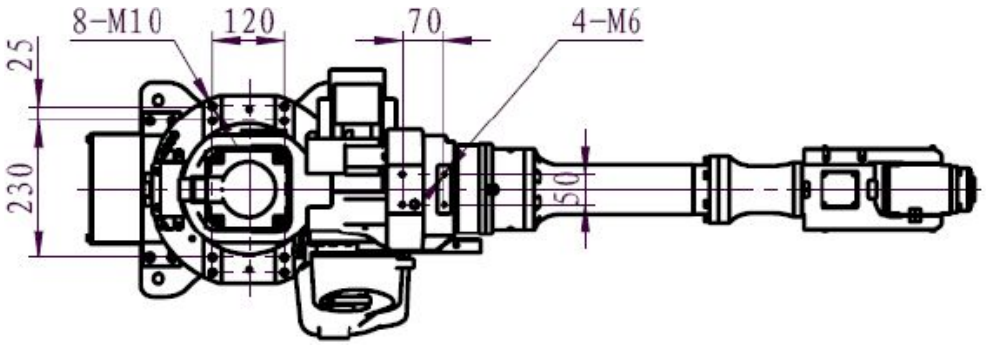

Figure 3-7 Dimensions of Forearm Drive Box and Rotary Seat Auxiliary Installation Hole of SA1800

4. The installation dimensions of SA1400 tool flange are shown in fig.3-8.The installation dimensions of SA1800 tool flange are shown in fig.3-9.

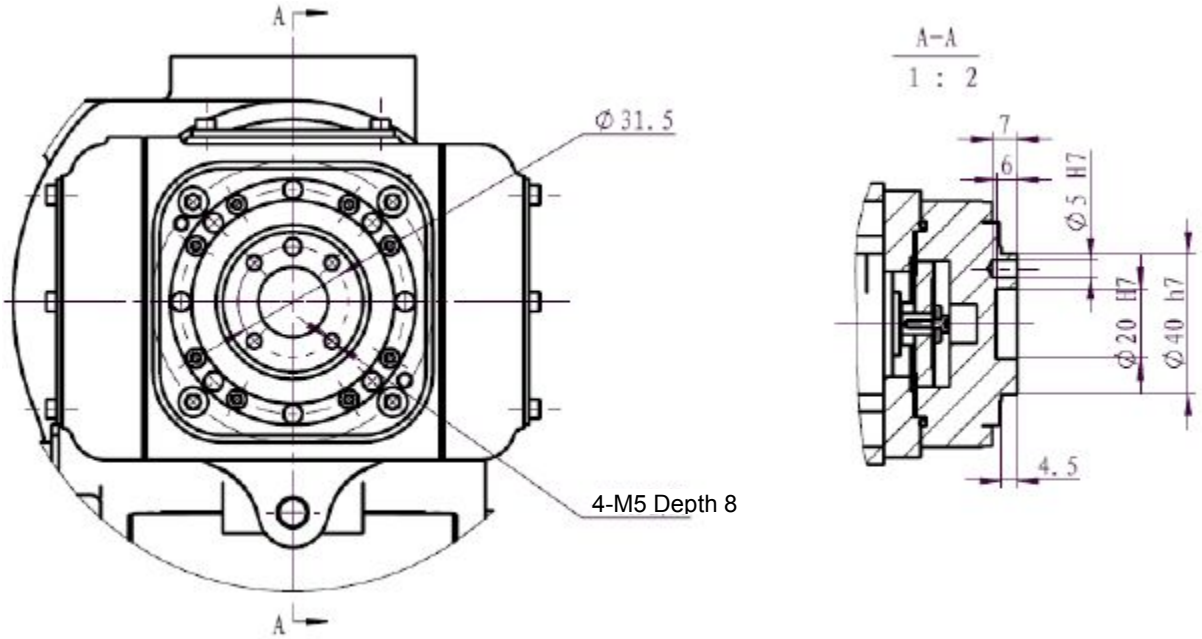

Figure 3-8 SA1400 Tool Flange Installation Dimensions

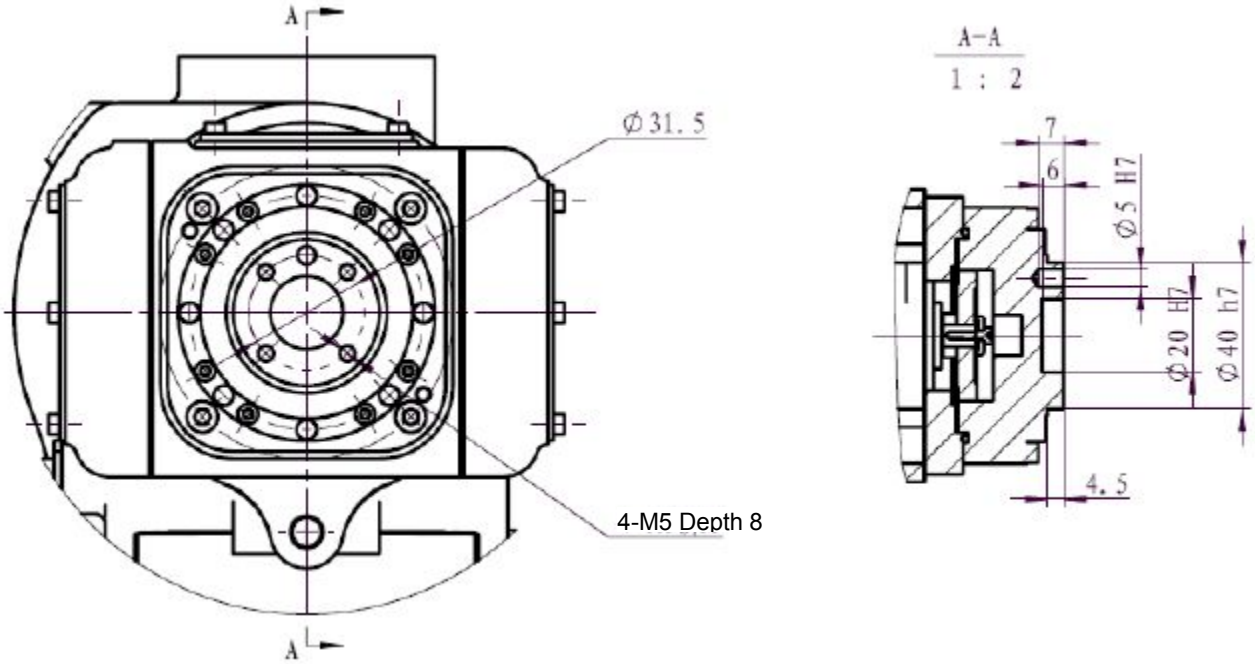

Figure 3-9 SA1800 Tool Flange Installation Dimensions

Chapter IV Maintenance

4.1 Lubrication

In order to maximize the robot's performance, VIGOGREASE RE0 and Shell Gadus S5V142W00 grease is used in oil pocket based on the brand of the reduction box of the robot. The use of or mixed use with other grease shall be avoided. The grease used for each robot is listed in the following table.

Robot model	Grease	Remarks
SA1400	Shell Gadus S5V142W00 grease is used in J1 – J3 oil pocket	Maintenance-free for J4, J5, J6 reduction box
SA1800	Shell Gadus S5V142W00 grease is used in J1 – J3 oil pocket VIGOGREASE RE0 grease is used in J4 oil pocket	Maintenance-free for J5, J6 reduction box

4.1.1 Filing and Drainage Hole in Each Axis

The filling and drainage hole of each axis of SA1400 is shown in fig.4-1; The filling and drainage hole of each axis of SA1800 is shown in fig.4-2.

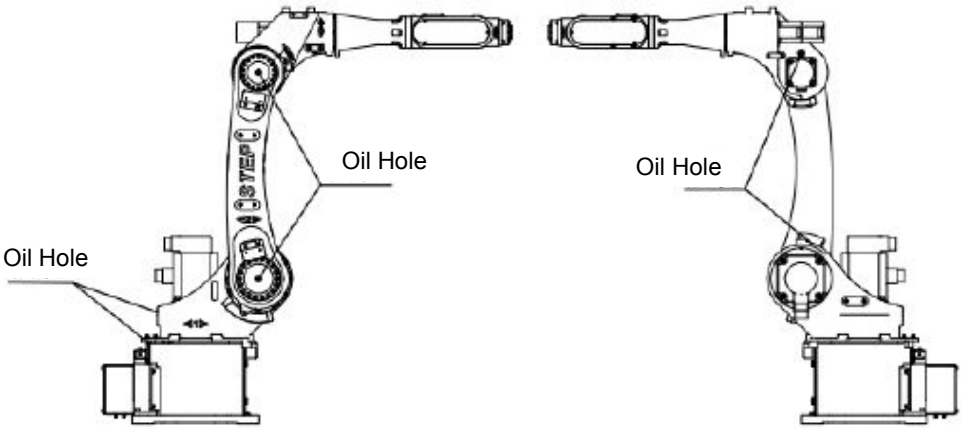

Figure 4-1 Oil Filling and Drainage Hole Location of SA1400

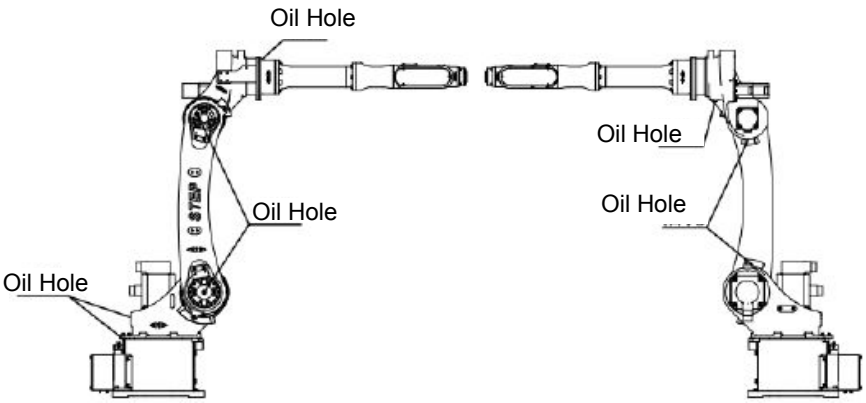

Figure 4-2 Oil Filling and Drainage Hole Location of SA1800

4.1.2 Lubricant replacement

1. Each axis is filled with grease before delivery. The grease gun is used for replacement.

2. According to the aging condition of the grease, the grease shall be replaced after 20,000 hours since delivery. However, when the surface temperature of the reduction box reaches above 40℃, you shall check the aging and contamination condition of the grease and shorten the replacement cycle.

3. The grease filled shall reach around 90% of the oil pocket. Consult STEP's after sales service staff for specifics.

4.2 Timing belt

The proper use of the timing belt not only ensures smooth production and transmission, but also reduces the failure rate of the equipment and increase the life cycle of the belt.

4.2.1 Model of the timing belt in the robot

The timing belt is used for wrist joint transmission of SA series robot. In the wrist joint, the timing belt is used for the transmission between J5 motor and J5 reduction box. High precision imported brand is used for this timing belt. If replacement is needed, contact STEP's after sales service staff.

4.2.2 Notice for use

1. Bending is forbidden, so as to avoid causing any damage to the skeleton material and affecting the belt strength.

2. It is forbidden to deal any cut on the belt to avoid premature failure of the belt.

3. Avoid contact with chemicals (in particular strong oxidizing acid, such as concentrated sulphuric acid)

4. Avoid long-term exposure to oil and water.

5. As the tension of the timing belt changes with time, the operator shall adjust the tension regularly, check the operation of the timing belt and its pulley and perform adjustment and replacement as needed. The inspection and maintenance cycle is recommended as around 1 month.

4.2.3 Notes for belt replacement

1. You shall inform STEP technicians before the replacement of the timing belt. The replacement cannot be performed until written permission from STEP is obtained. Otherwise, our company is not responsible for any damage or downtime possibly caused by the replacement.

2. In the selection of the timing belt, the belt shall have clean surface, with no deformation and full teeth.

3. During replacement, the timing belt can only be removed when the tension is reduced to the lowest point. It is forbidden to pry off the belt using non-dedicated tool with high tension on the belt.

4. In replacement, if the center-to-center distance of two pulleys can be moved. You shall decrease the center-to-center distance and reset it when the timing belt is installed. If there is tension pulley, loose the pulley, install the belt and re-install the pulley.

5. The pre-tensioning force shall be adjusted in installation. If the pre-tensioning force is not sufficient, the transmission capability will be reduced greatly and the pulley's temperature will rise sharply and cause wear. In turn, if the pre-tensioning force is too strong, the service life of the belt will be decreased. In conclusion, proper pre-tensioning force is key to normal timing belt operation.

6. After the replacement, return-to-zero process shall be done by professional technician for the robot before it can be used normally. Otherwise, the zero point of the robot will be lost, which will cause danger.